FIRST ANGLE PROJECTION(ALL DIMENSIONS IN MILLIMETRES)

CAUTION THE INFORMATION ON THIS DOCUMENT IS THE PROPERTY OF BHARAT HEAVY ELECTRICALS LIMITED. IT MUST NOT BE USED DIRECTLY OR INDIRECTLY IN ANY WAY DETRIMENTAL TO THE INTEREST OF THE COMPANY

DRAWING No 3-80-423-35613

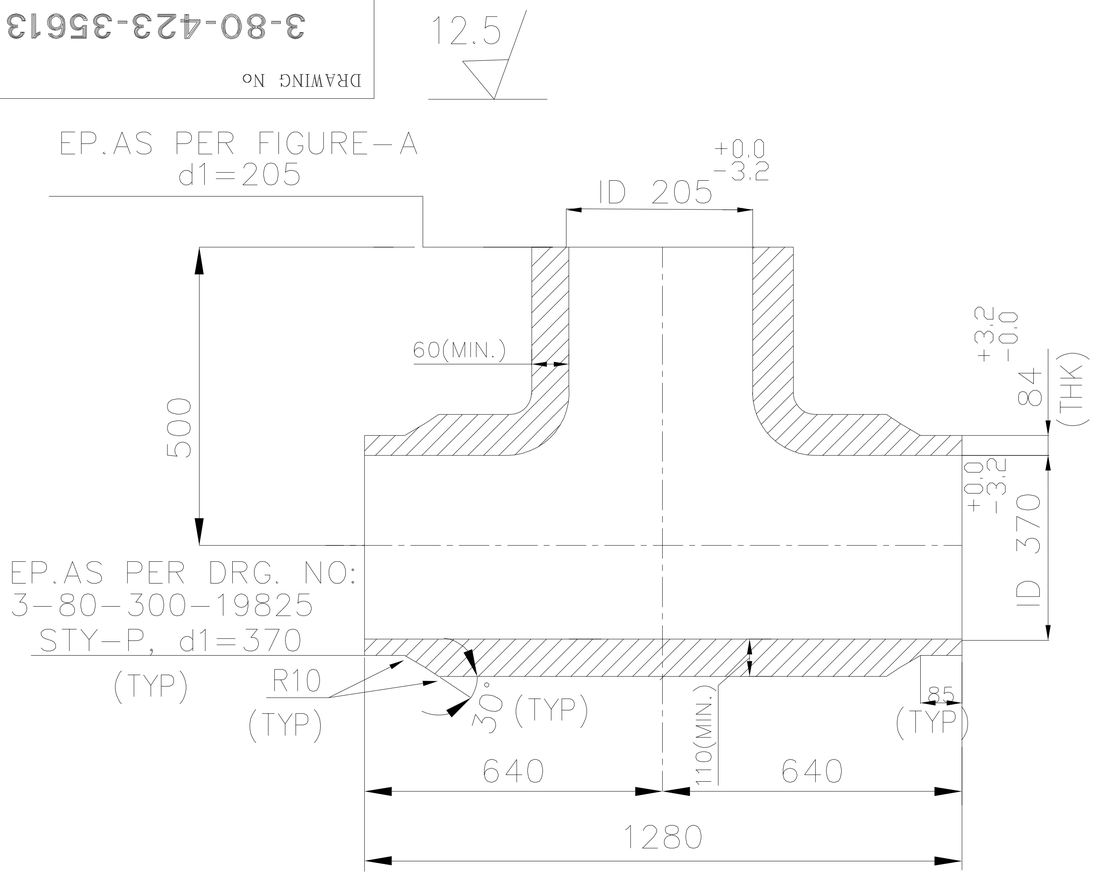

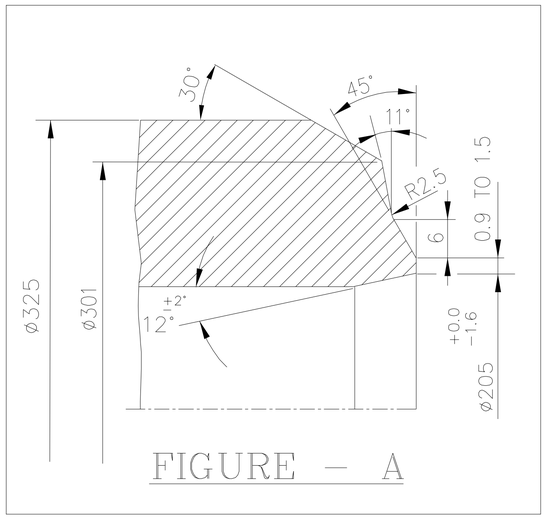

FIGURE - A

NOTES :-

01. DESIGN PRESSURE : 490 kg/sq.cm.(g)
02. DESIGN TEMPERATURE : 200° C
03. ALL DIMENSIONS ARE FINISHED DIMENSIONS.
04. MANUFACTURING, INSPECTION AND TESTING SHALL BE AS PER IBR, ASME B16.9 AND SA234.
05. FITTING TO COMPLY WITH ASME B16.9 AND DIMENSIONS ARE AS PER THIS DRAWING.
06. FOLLOW TDG:102 (LATEST REVISION)
07. WEIGHT GIVEN IN TITLE BLOCK IS INDICATIVE ONLY. ACTUAL WEIGHT TO BE FURNISHED BY FITTING SUPPLIER.
08. CONSTRUCTION SHALL BE SEAMLESS
09. AVERAGE INSIDE DIAMETER ON FITTING BODY TO GUARANTEE FLOW AREA MIN 90% OF THE CIRCULATION AREA OF THE CONNECTING PIPE
10. DETAILED DIMENSIONS SHALL BE SUBMITTED FOR REVIEW

ITEM NO.	DESCRIPTION	DRAWING NO.	ITEM NO. / VAR NO.	MATERIAL CODE / MATERIAL SPEC.	A / C	UNIT WT. / QTY.
01	BW UNEQUAL TEE ID370X84/ID205X48	3-80-423-35613		925051960000 / SA234WPC	A	1808 316 / 1

TYPE OF PRODUCT
OR NAME OF
CUSTOMER/PROJECT

BHARAT HEAVY ELECTRICALS LTD.,
PIPING CENTRE,
CHENNAI 600 017

	NAME	SIGN	DATE	NO OF ITEMS
DRN	S ARUNSHARMA		12.04.19	
CHD	P SURESH		12.04.19	
APPD	SARAVANAN C		12.04.19	

DEPT. / CODE	GRADE OF UN TOL. DIM	SCALE	WEIGHT (Kg).	BHEL PO REF.NO:	ITEM No.
	C/M/F	N.T.S.			

TITLE
BW UNEQUAL TEE
(ID370X84/ID205X48-SA234WPC)

CARD CODE: U 01

DRAWING No. 3-80-423-35613

REV 00

REV	DATE	ALTD : / APPD :	REV	DATE	ALTD : / APPD :
02			01		

SIZE A3